Electric TV Lift, TS700C & TS1000C

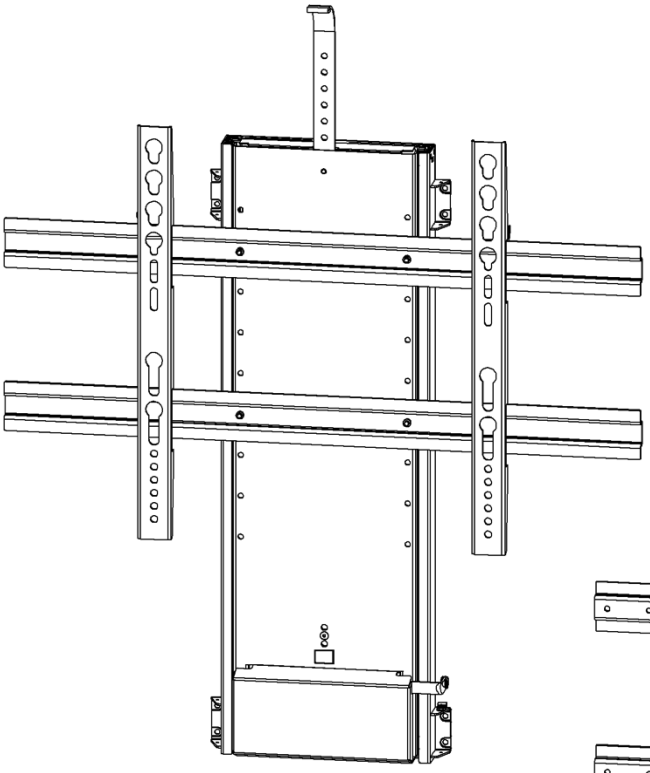

TS1000C

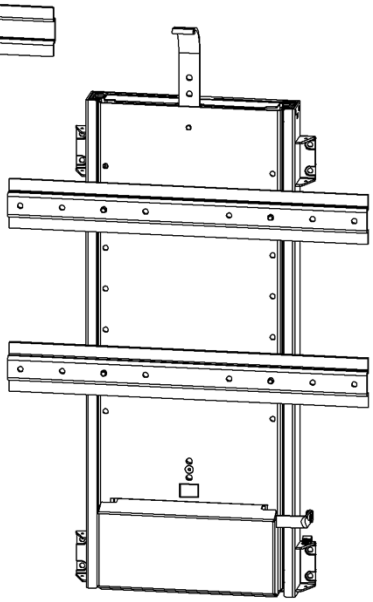

TS700C

INSTALLATION INSTRUCTIONS

CONTENT:

1. Important safety instructions.
2. Specifications and main dimensions.
3. Parts included.
4. Installation.
5. RF remote system.
6. Feature functions and settings including anti-squeeze.
7. Mechanical adjusting the stroke length of the lift.
8. Declaration of conformity.

WARNING

WARNING: FAILURE TO COMPLY WITH OR OBSERVE ALL ASSEMBLY, SAFETY AND OPERATION INSTRUCTIONS AND WARNINGS REGARDING THE USE OF THIS PRODUCT MAY RESULT IN SERIOUS BODILY INJURY.

1. Important safety Instructions.

CAUTION !

Before you begin any of the Installation procedures on page 7, read and follow the warnings and safety instructions on page 2 and 3.

WARNING !

THIS IS NOT A TOY !

CUSTOMER WARNING !

**This appliance is sold as a component and should be installed only by a capable adult.
It should not be operated by children under 8 years old.
Operation by persons of reduced physical, sensory or mental capabilities or with lack of experience and knowledge or by older children should only be allowed
if they are given supervision or adequate
instruction to use the appliance in a safe way and understand the hazards involved**

WARNING !

This is a class III appliance and shall only be used together with a SELV protected type power supply unit with 29Vdc, min. 100W and an overload current of at least 9A

Waste disposal

Do not deposit this equipment with the household waste. Improper disposal can harm both the environment and human health. For Information about waste collection facilities for used electrical and electronic devices, please contact your city council or an authorized company for the disposal of electrical and electronic equipment.

Symbol explanation

Class III appliance, designed to be powered from a Safety Extra Low Voltage power source (SELV)

CE marking, declaration that the product meets the requirements of the applicable EC directives

Waste Electrical and Electronic Equipment

Safety guidelines

Use the following safety guidelines to help protect your lift from potential damage and to ensure your own personal safety.

- Read all the installation instructions before testing or installing your lift.
- Read and follow all safety instructions.
- The remote control and rocker switch should only be accessible to people in compliance with the “Customer Warning” on page 2.
- To prevent bodily injury keep hands and clothing away from the lift while the lift is in operation.
- Before installing the lift or working with its connections, unplug the lift from the electricity main supply.
- Do not install the lift, power supply or R.F. module in places subject to high temperatures for example near a radiator, or heating vent.
- The TV lift must only be mounted in a dry area and it must be ensured before use that the lift is safe or protected from liquid contact or spillage.
- To avoid damaging the power supply, R.F. module and power cord, do not put anything on it or place it where it could become damaged.
- Unplug the lift in the following conditions:
    - When the power cord or plug is damaged or frayed.
    - If the lift, power supply or RF module has been exposed to rain or water or any liquid contamination whatsoever.
    - If the lift exhibits a distinct change in performance, indicating a need for attention.
- MANUFACTURES who build this lift into other products or use it with other products, MUST make sure to prevent bodily injury. The MANUFACTURER of the final product is responsible to give the end user proper warnings and instructions for use.

2. Specifications and main dimensions.

Materials and weights:	Steel, black powder coated - Weight ~ 17/23 kg
Max. working loads:	65 kg (by standard installation) 29 kg (when lift is mounted upside down) 100 kg peak load
Duty cycle:	10% by 50% of working load or max 2 min. continuously
Operation:	Remote and rocker switch
Voltage: **Standby Consumption:**	100-240 VAC / 50/60Hz < 0,15 Watt
Above specifications may vary depending on local temperature, humidity and input voltage.	

Main dimensions, TS700C [mm]:

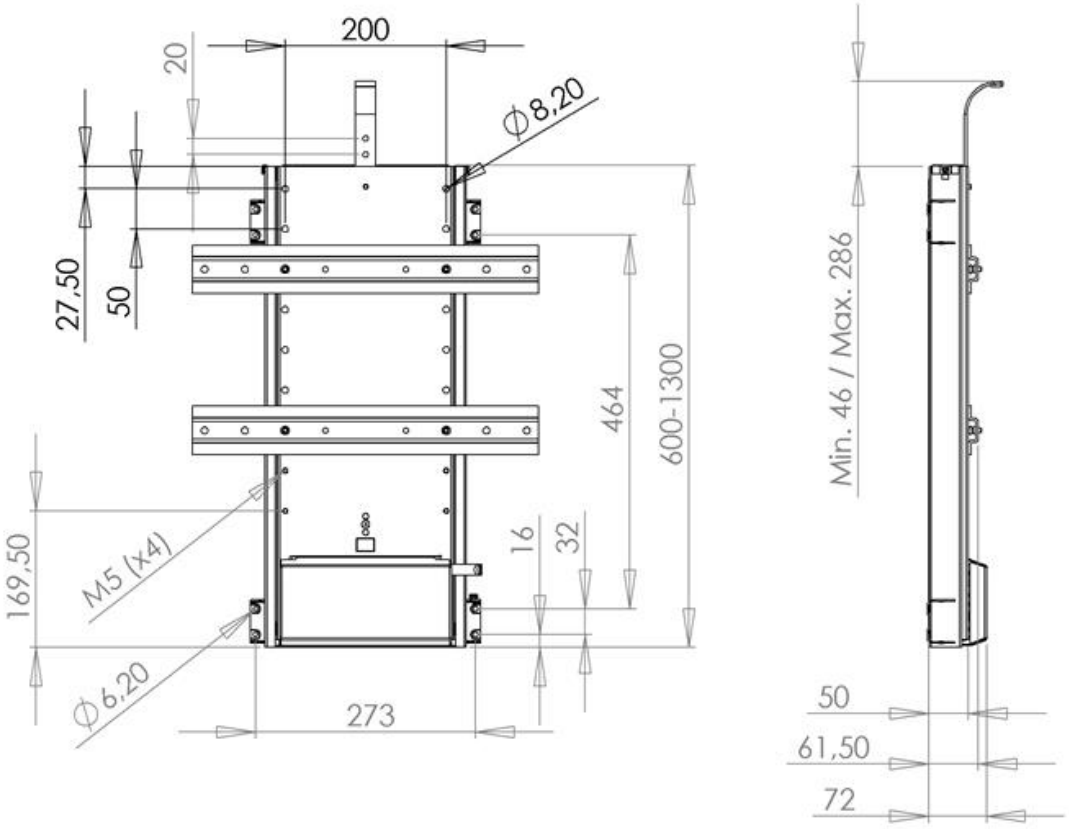

VESA, TS700C:
400x400, 400x200, 400x100
300x300 (see venset.com for mounting instruction)
200x200, 200x100
100x100

Main dimensions, TS1000C [mm]:

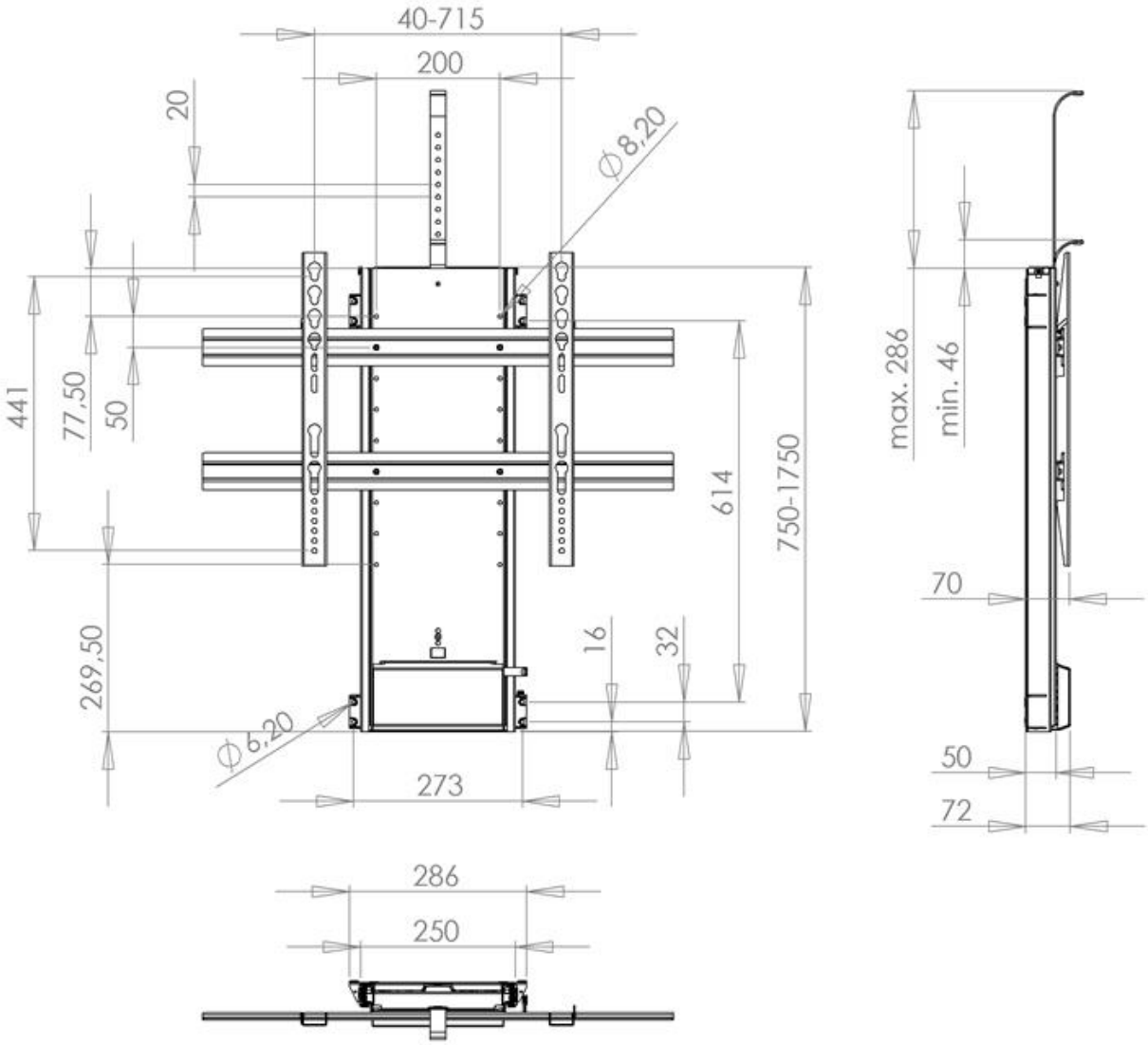

VESA, TS1000C:
600x400, 600x200, 600x100
400x400, 400x200, 400x100
300x300, 200x200, 200x100

3. Parts included.

Lift unit (#1)
Lid lifter (#2)
Lift brackets (#3)
TV mounting brackets (#4) *(TS1000C only)*
R.F. Module (#5)
Remote control (#6)
AC input wire, country configured (#7)
Power supply bracket (#8)
Rocker switch (#9)
Power supply (#10)

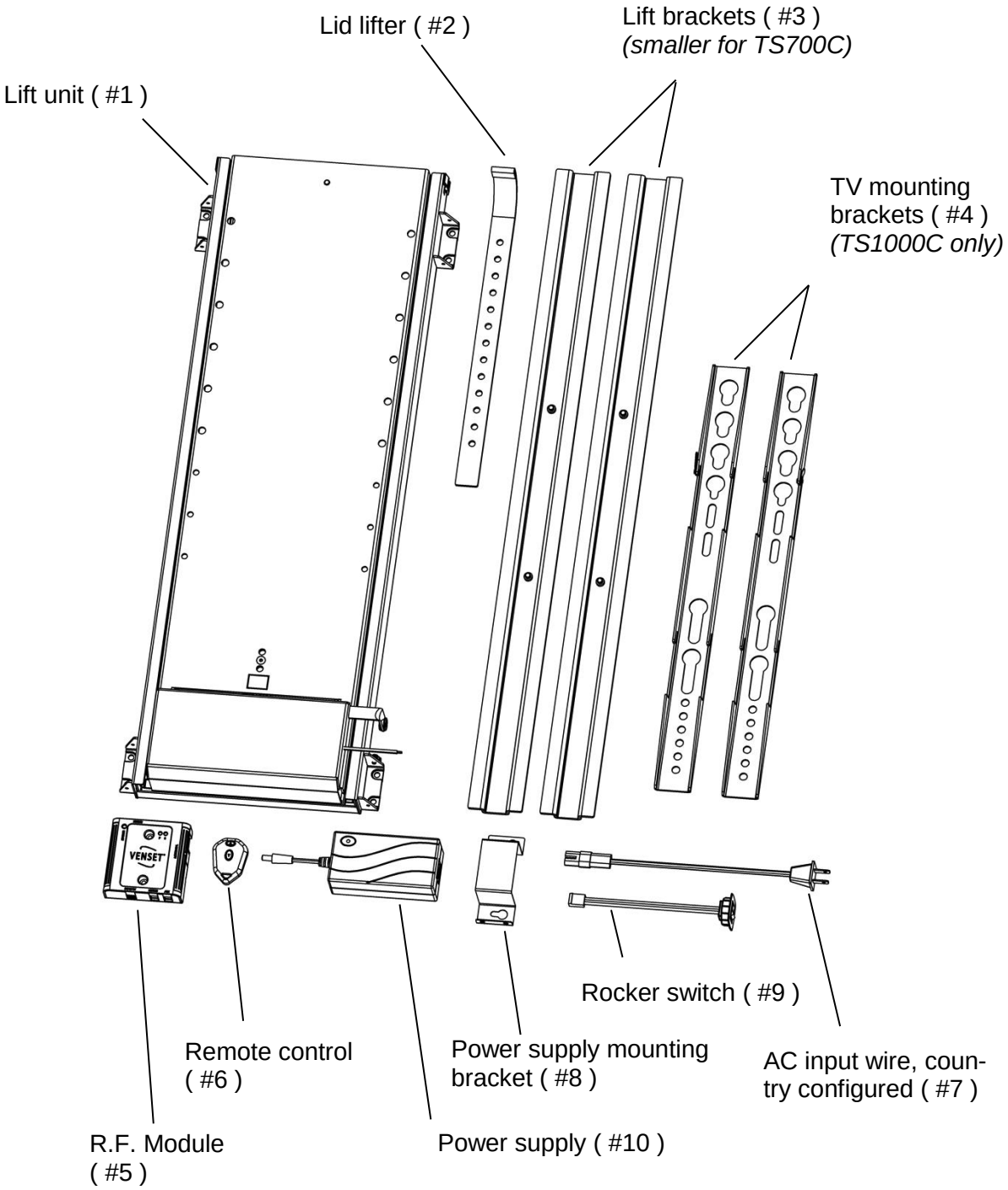

4. Installation. (Proceed only after having read the previous pages)

1) Check box contents with page 6 and read the remote RF instruction. Connect the lift (#1) to the RF Module (#5). **Only once all other connections have been made plug power supply (#7) into the wall socket**. Position lift vertically. Test the lift using the rocker switch (#9) 10cm/4" up and down is enough. Releasing the rocker will stop the lift. Now test the RF Remote, the default setting on the RF handset is one press for continuous movement, press again to stop. Unplug the lift ready for mounting.

2) Mount the lift unit (#1) on the back panel of the cabinet or mounting surface in a location that will allow full up and down movement of the TV. When operating a hinged lid the lift must operate for a minimum of 4mm/1/8" before any contact happens.

3) Fasten the lift securely using the 8 screw holes shown below. Screws must be appropriate for the material being used. **The lift must be mounted vertically (using a spirit level). The surface to which the lift is mounted must be totally flat, causing no stress / twist across the lift carcase. Mounting screws should only be lightly tightened to avoid uneven stress on the lift carcase.**

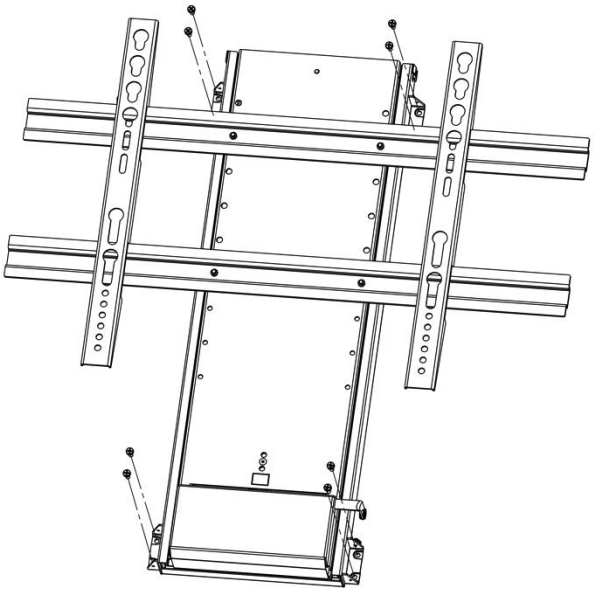

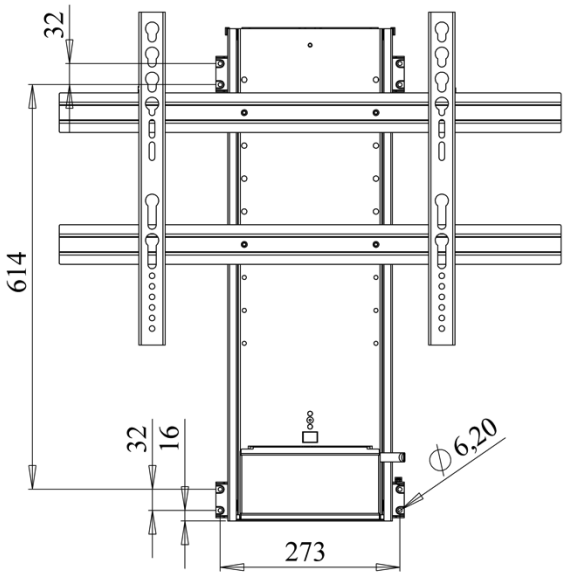

4) Mount the power supply + bracket (#8) to the right side adjacent to the lift as shown in the drawing page 9. Secure with 2 screws.
5) Fasten R.F. Module (#5) next to the power supply leaving enough room to connect the wires.
6) Mount rocker switch (#9) the hole size required is 30mm. Secure excess wire to keep away from moving parts.

7) Make connections as no.1 above. Refer to the connection diagram. **Only once all other connections have been made plug power supply (#10) into the wall socket. Test the lift fully up and down.**

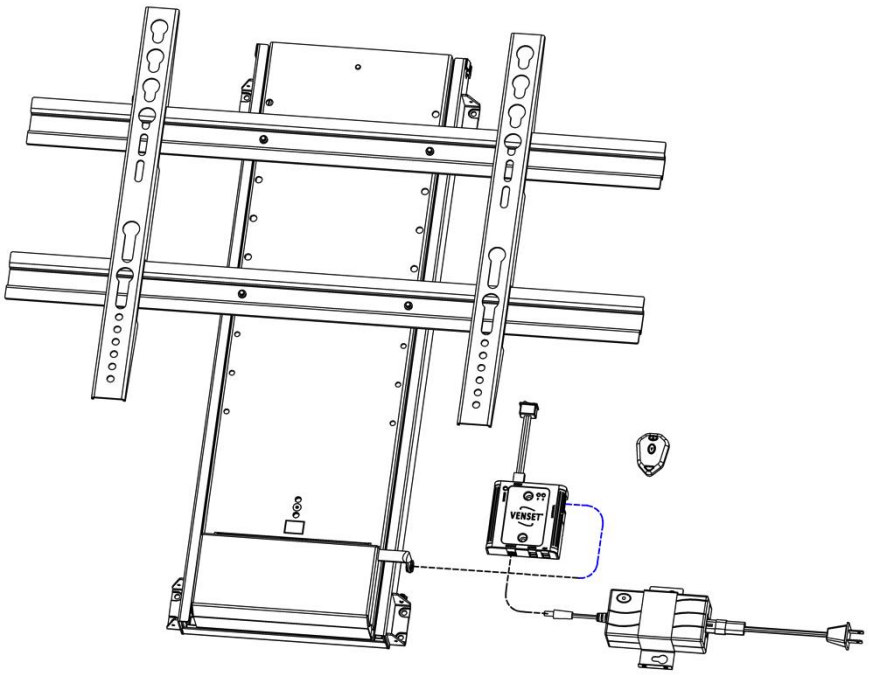

8) Fitting the VESA bracket if required:
VESA sizes such as 200x200 and 200x100 do not require the bracket and should be fixed with your own suitable dome head Allen screws directly through the holes in the TV lift. Raise the lift to screw into your TV's VESA holes from behind.

TS700C contains a pair of short horizontal rails
Fit these rails to the front of the lift using the screws supplied, first fully raise the lift to screw into the rails threaded holes from behind**. Take care to fix the bars at the height that will suit your TV.
Now attach your TV to the rails using your own bolts suitable for your TV.
** VESA size 300x300 / 400x300 / 400x400 requires the lower rail to be fitted from the front.

TS1000C contains longer horizontal rails plus vertical bars
Fit these rails to the front of the lift using the screws supplied, first fully raise the lift to screw into the rails threaded holes from behind. Take care to fix the bars at the height that will suit your TV. Now slide the vertical bars onto the rails.
Now attach your TV to the vertical bars using your own bolts suitable for your TV.

The instructions above are based on a typical TV cabinet installation.

5. RF remote system.

Installation

- connect the power supply and the motor unit to the remote receiver. 2 different plug sizes make this connection only possible to make in the right way
- after having connected the plugs, the blue light will be lit
- push the emitter buttons and the motor unit will move up and down
- for stopping the motion one of the buttons need to be pushed again

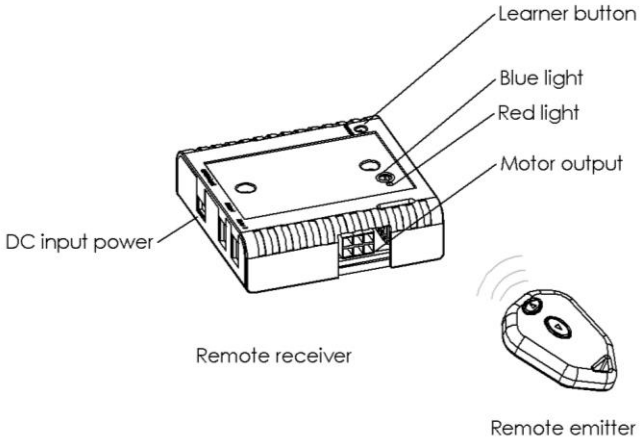

Learning

- if the remote receiver does not respond when pushing the emitter buttons, reset the receiver. After that, code the emitter and receiver together again.
- it is possible to code up to 10 remote emitters to the remote receiver.

Coding

- push the learner button on the receiver for less than 1 sec.
- push one of the emitter buttons
- the red light will start flashing
- push one of the emitter buttons again and the red light will turn off
- the units now are coded together with a unique code

Reset

- push and hold down the learner button on the receiver for 10 sec. (will be reset when the red light start to blink).

External rocker switch

- the external rocker switch #9 can be connected to the receiver, if a fixed operation unit is required. This should always be fitted or accessible in case the RF handset or battery fails.

Trouble shooting

- check the plug connections
- check whether the blue light is on
- reset the receiver and make a new coding
- always test the lift on the manual rocker switch
- see www.venset.com , click “support”

Change of battery in RF emitter, type 27A/12V

1.) Remove the three screws on back side
2.) Remove the lid on back side
3.) Lift up old battery. In case of a leaking battery wear protection gloves.
4.) Place new battery with positive polarity pointing to the mark VCC on the PCB.
5.) Place lid on back side and tighten the three screws

Do not deposit used batteries with the household waste use special waste collection facilities for used batteries.

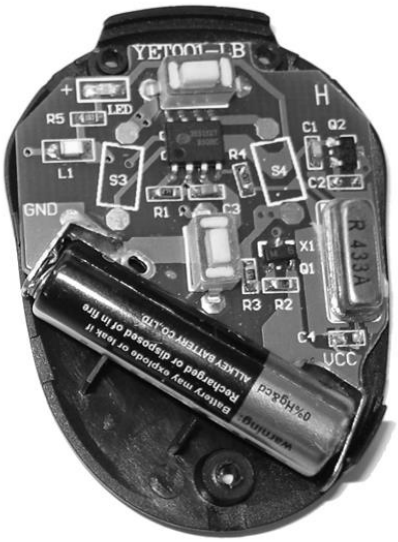

6. Feature functions and settings.

Several features are controlled by using Jumpers. A Jumper is either **set** or **open**. See example below.

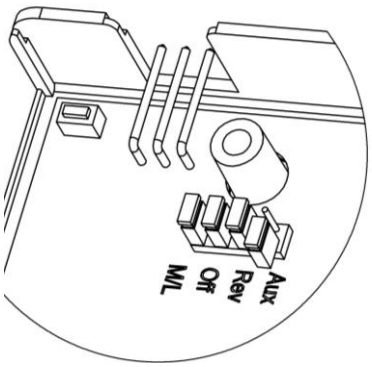

Example of Jumper settings.

Jumper Aux = open
Jumper Rev = set
Jumper Off = set
Jumper M/L = set

a. Electronically adjusting the stroke length of the lift

The bottom and top stop is possible to set electronically. The Rocker switch (#9) has to be fitted for being able to make this setting.

Before the stroke length of the lift can be adjusted electronically it is required to move the lift into its mechanical bottom position to synchronize the control box with the lift.

Setting of new bottom stop.
Push the rocker switch until the lift is at the required bottom height and release. On the RF receiver push the Learner button until the red light comes and then release. Now push the rocker in the down direction and the red light starts to flash and now release. The new bottom height is now set.

Setting of top stop.
Push the rocker switch until the lift is at the required top height and release. On the RF receiver push the Learner button until the red light comes and then release. Now push the rocker in the up direction and the red light starts to flash and now release. The new bottom height is now set.

To reset the factory settings.
Bottom stop - Press the rocker switch to send the lift in the downwards direction, keep pressing even after the bottom stop point is reached and then simultaneously press the learner button once. When the red light on the RF receiver blinks then the factory setting has been restored.

Top stop - Press the rocker switch to send the lift in the upwards direction, keep pressing even after the top stop point is reached and then simultaneously press the learner button once. When the red light on the RF receiver blinks then the factory setting has been restored.

AS AN EXTRA SAFETY FEATURE VENSET SUGGEST ALSO SETTING THE MECHANICAL END STOP ADJUSTMENT JUST BEYOND THE ELECTRONIC STOP POSITIONS – SEE PAGE 13 – 14.

b. **Orientation of TV-Lift**
The **Jumper Rev** is default = **set,** for TV-Lifts mounted upside up. For upside down the **Jumper Rev** has to be moved to **open.**

c. **Anti-squeeze on/off (autostop with auto reverse)**
The **Jumper Off** is default = **set**, which means that the anti-squeeze function is off. Move the **Jumper Off** to **open** to activate the function. The system will work in both directions when activated *.

d. **Sensitivity of Anti-squeeze**
The sensitivity of the function is possible to select.
Jumper Aux = **set** (default setting) will give a low sensitivity *.
Jumper Aux = **open** will give a high sensitivity *.

The default low sensitivity setting is for higher loads. If the loading is low then it will be necessary to select the high sensitivity setting to get the best function of the system. 'Load' includes the effect of any type of cabinet lid. The lift installer can test both settings but generally speaking load above 20-30kg may require the default low sensitivity setting.

Anti-squeeze safety precaution*
This feature will stop the TV-Lift in both directions and it will reverse approximately 3cm automatically if a sudden conflict with an obstacle happens. The sensitivity is different in up and down directions. With the lift installed upright and "Jumper Aux = set", then in the event of a downward collision the lift will squeeze with a pressure equal to the weight of the TV that is fitted to the lift plus approximately 3-5kg before the Anti-squeeze system will operate. For the upward direction the system will squeeze with a pressure of less than 3-5kg before operating.

If the lift is installed upside down ensure Jumper Rev is set correctly and the above will still apply.

The feature will not work in the following situations.
If the collision and load impact happens in a gradual way.
If the collision happens within 1 sec after the up or down button has been activated.

e. **Remote emitter function**
The **Jumper M/L** is default = **set** and the buttons on the emitter only need to be pushed once for operation. If moved to **open** then the emitter button will need to be held down during the operation of the lift, ie..for use where a higher level of safety may be required.

Using multiple TS700C/1000C combined
With the optional 'sync control box' it is possible to synchronize two or more lifts up to a maximum of six. eg.. for extra wide or extra heavy screens. See Venset.com

7. Mechanical adjusting the stroke length of the lift.

Note: see page 11a before making a mechanical adjustment

Adjusting the bottom stop:

The bottom stop can be adjusted to any preferred height, e.g. if you don't want the lift to go all the way down into the cabinet. You can adjust just one or both end stops.

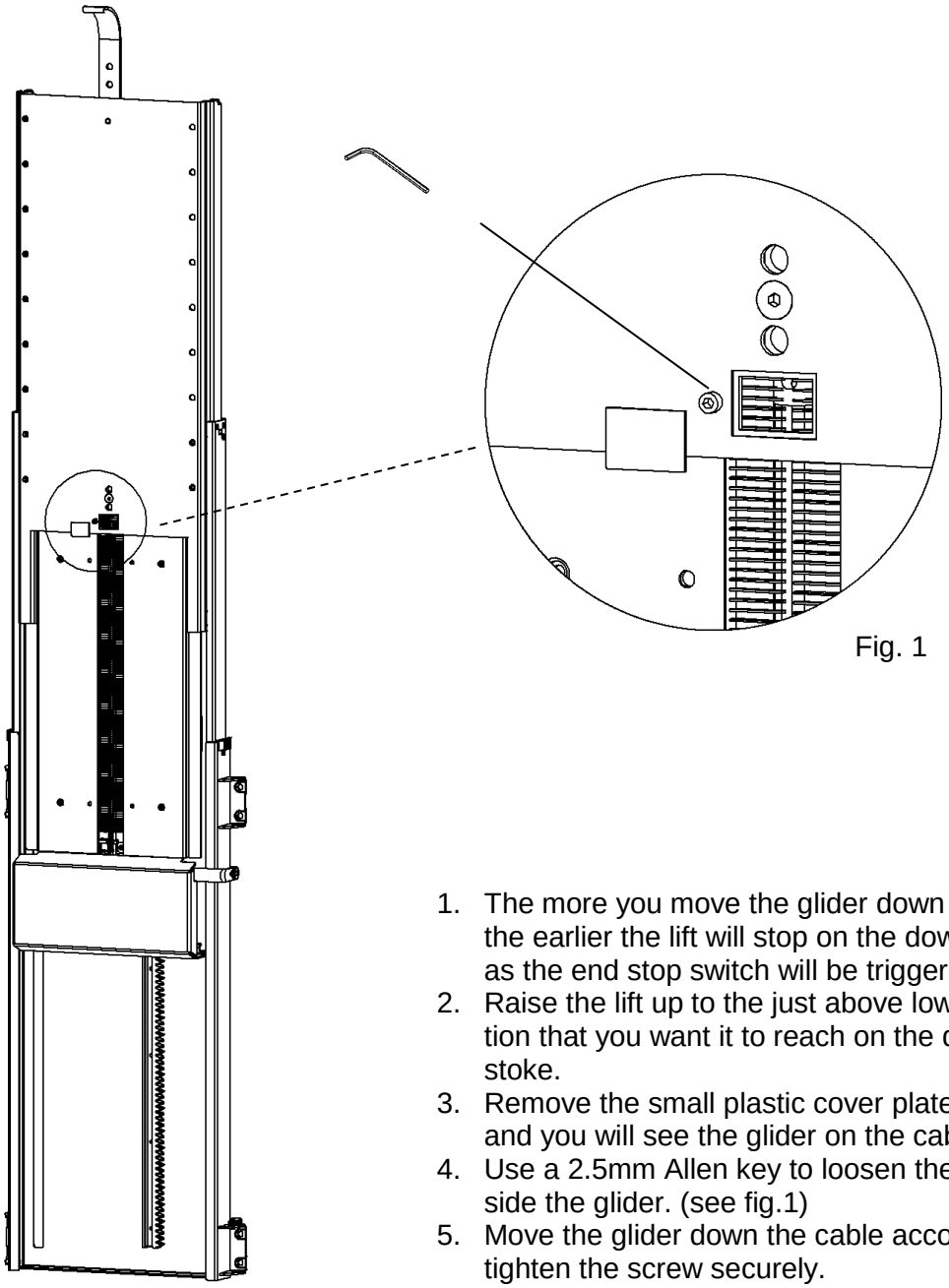

Fig. 1

1. The more you move the glider down the cable the earlier the lift will stop on the down stroke as the end stop switch will be triggered sooner.
2. Raise the lift up to the just above lowest position that you want it to reach on the down stoke.
3. Remove the small plastic cover plate (see fig.1) and you will see the glider on the cable.
4. Use a 2.5mm Allen key to loosen the screw inside the glider. (see fig.1)
5. Move the glider down the cable accordingly and tighten the screw securely.
6. Replace the plastic cover plate, the glider will no longer be in this window.
7. Test the lift fully up and down and check the desired bottom stop position is as you require.

Adjusting the top stop:
The top stop can be adjusted to any preferred height, e.g. if you don't want the lift to go all the way up out of the cabinet. You can adjust just one or both end stops.

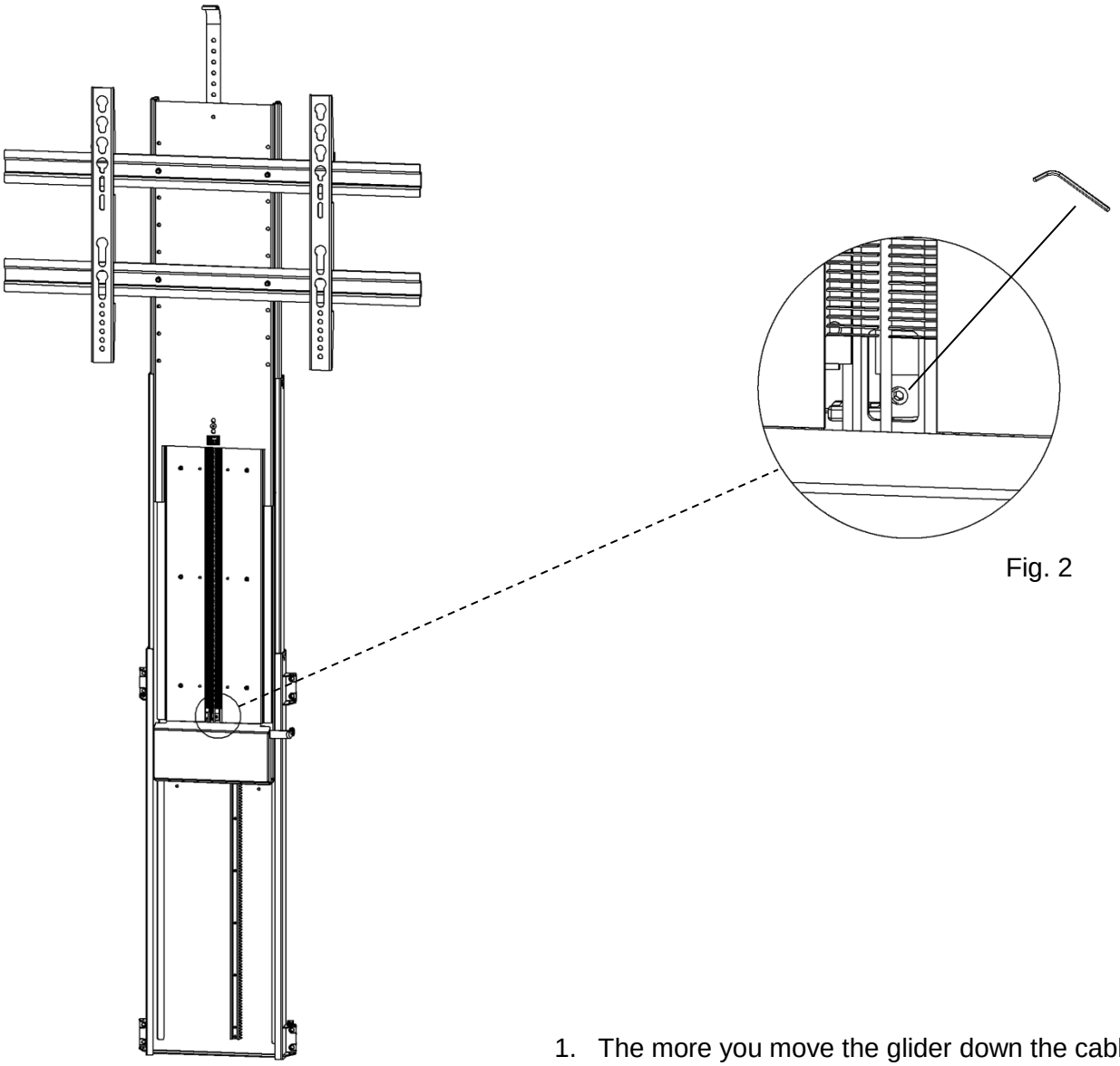

Fig. 2

1. The more you move the glider down the cable the earlier the lift will stop on the up stroke as the end stop switch will be triggered sooner.
2. Raise the lift up to full height.
3. You will see the glider on the cable below the nylon brushes (see fig.2)
4. Use a 2.5mm Allen key to loosen the screw inside the glider. (see fig.2)
5. Move the glider down the cable accordingly and tighten the screw securely.
6. Test the lift fully up and down and check the desired top stop position is as you require.

8. Declarations of conformity.

We hereby declare, under our sole responsibility that the following products:

- electric TV-lift mechanism product type TS700C / TS1000C

which are covered by this statement, are in conformity with the following standards and other normative documents::

- Counsel Directive 89/336/EØF with later changes
- Counsel Directive 73/23/EØF with later changes

Manufacturer:
VENSET A/S, Nygade 63, DK-6900 Skjern, Denmark
info@venset.com, www.venset.com

The information in this document is subject to change without notice.

VENSET

Overensstemmelseserklæring

Declaration of conformity

Fabrikant (navn og adresse): VENSET A/S, Nygade 63, DK-6900 Skjern, Denmark
Manufacturer (name and address):

Erklærer hermed, at følgende produkt:
Hereby certify that the following product:

Benævnelse, mærke, type: Elektrisk TV-lift, TS700 & TS1000 series
Description, ID/mark, type: Electric TV-lift, TS700 & TS1000 series

Evt. serienr.: Alle efter serie nr. V-00067
Serial No. if any: All after serial No. V-00067

Er fremstillet I overensstemmelse med Europa-Parlamentets og Rådets Direktiv af 15. december 2004 om indbyrdes tilnærmelse af medlemsstaternes lovgivning om elektromagnetiske kompatibilitet (2004/108/EF) ifølge standarderne DS/EN 55014-1:2007, DS/EN 55014-2:1997, DS/EN 61000-3-2:2006, EN 61000-3-3:2008
Complies with the EMC directive 2004/108/EC according to the standards DS/EN 55014-1:2007, DS/EN 55014-2:1997, DS/EN 61000-3-2:2006, EN 61000-3-3:2008

og er fremstillet I overensstemmelse med Europa-Parlamentets og Rådets Direktiv af 12. december 2006 om indbyrdes tilnærmelse af medlemsstaternes lovgivning om elektrisk materiel bestemt til anvendelse inden for visse spændingsgrænser (2006/95/EF) ifølge standarden DS/EN 60335-1:2006
and complies with the DIRECTIVE 2006/95/EC OF THE EUROPEAN PARLIAMENT AND OF THE COUNCIL of 12 December 2006 on the harmonization of the laws of Member States relating to electrical equipment designed for use within certain voltage limits (codified version) according to the standard DS/EN 60335-1:2006

Navn, titel og underskrift af fabrikanten:
Name, title and signature of manufacturer:

28/8-2008
Dato/date

M. Overgaard
Approval Engineer
Underskrift/signature

VENSET
VENSET A/S
Nygade 63 · DK-6900 Skjern
Tel: +45 9735 4611 · Fax: +45 9735 4631

VENSET

EF – komponenterklæring type "bilag II B"

EEC Declaration of a component "appendix II B"

Fabrikant (navn og adresse):
Manufacturer (name and address): VENSET A/S, Nygade 63, 6900 Skjern, Denmark

Erklærer hermed, at følgende produkt:
Hereby certify that the following product:

Benævnelse, mærke, type: Description, ID/mark, type:	Elektrisk TV-lift, TS700 & TS1000 series Electric TV-lift, TS700 & TS1000 series
Evt. serienr.: Serial No. if any:	Alle efter serie nr. V-00067 All after serial No. V-00067
Evt. bemyndigede organ og nr. Notified body if any:	Teknologisk Institut, Århus, Denmark
Evt. EF- typeattest: EEC-type certificate if any:	
Evt. Harmoniserede standarder: Harmonised standards if any:	

Er fremstillet I overensstemmelse med bekendtgørelse nr. 561 af 24. juni 1994, der gennemfører EUROPA-PARLAMENTETS OG RÅDETS DIREKTIV 98/37/EF
Made according to announcement No. 561 of June 24, 1994 that implements the DIRECTIV 98/37/EF

Ovennævnte produkt må **IKKE** tages i brug, før den maskine, hvori det er indbygget eller hvortil det skal anvendes er erklæret i overensstemmelse med alle relevante bestemmelser.
Above product may **not** be taken into use, before the machine into which is has been built in or to which purpose it must be used for, conform to any relevant regulations.

Navn, titel og underskrift af fabrikanten:
Name, title and signature of manufacturer:

28/8-2009
Dato/date

M. Overgaard
Approval Engineer
Underskrift/signature

VENSET
VENSET A/S
Nygade 63 · DK-6900 Skjern
Tel: +45 9735 4611 · Fax: +45 9735 4631

The information in this document is subject to change without notice.